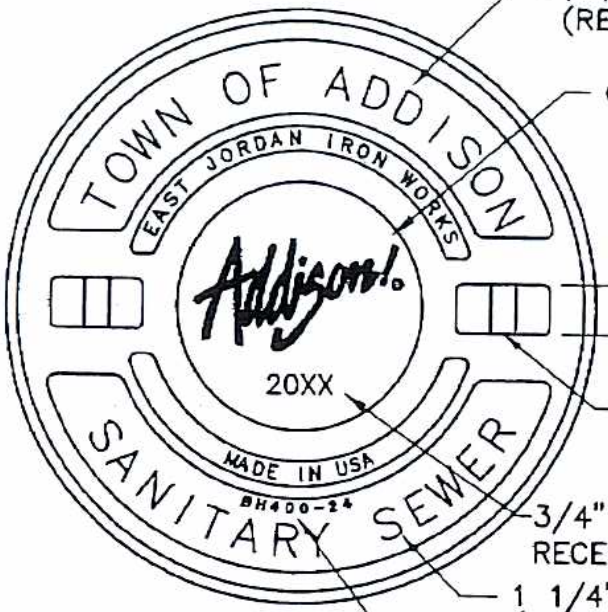


1 1/4" RAISED LETTERING (RECESSED FLUSH)

CUSTOM LOGO

2" [51mm]

SEE PICKBAR DETAIL

3/4" [19mm] LETTERING RECESSED (changed annually)

1 1/4" RAISED LETTERING (RECESSED FLUSH)

3/8" RAISED LETTERING

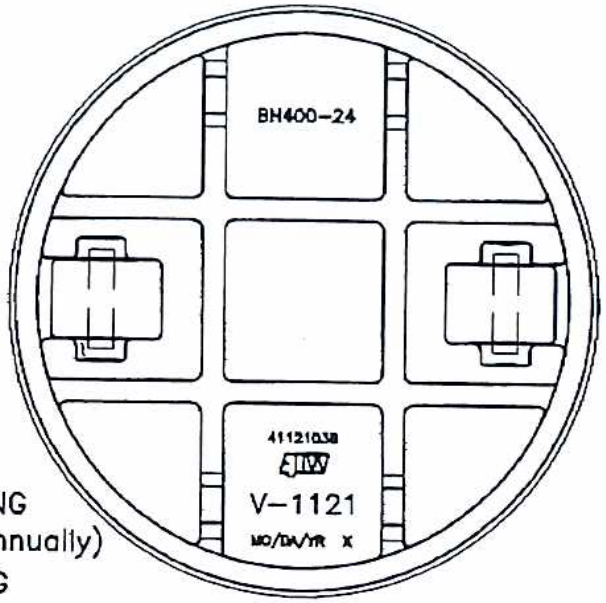


**BOTTOM VIEW OF COVER**

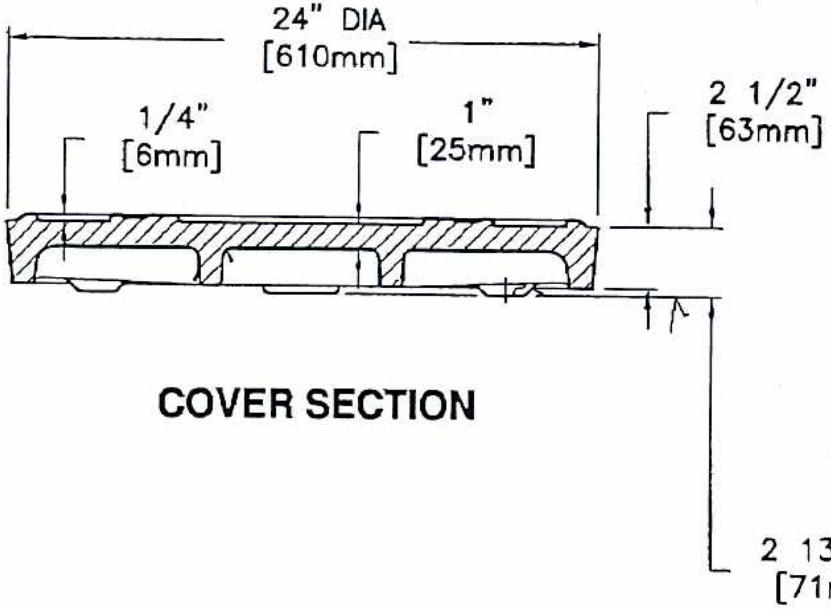


**COVER SECTION**

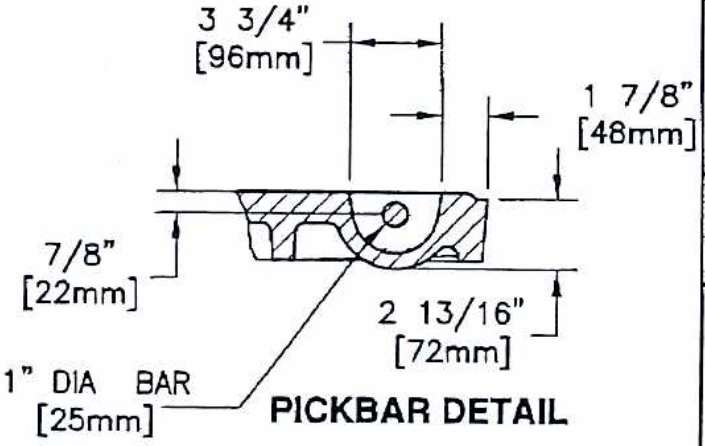


**PICKBAR DETAIL**

√ MACHINED SURFACE

EAST JORDAN IRON WORKS, INC.
P.O. BOX 439
EAST JORDAN, MI. 49727
1-800-874-4100
FAX: 231-536-4458

| DRAWN | DATE |
|---|---|
| SMH | 02/09/04 |
| APPROVED | DATE |

# COVER

PRODUCT NO.
**41121038**

CATALOG NO.
**V-1121**

REF. PRODUCT DRAWING
41121038

EST. WT.
COVER: 188 LBS 85kg

OPEN AREA
N/A

MAT'L SPEC.
COVER – GRAY IRON
ASTM A48 CL35B

LOAD RATING
**HEAVY DUTY**